PROPULSION DIRECTORATE

Monthly Accomplishment Report
November 2003

Contents **Page**

Integrated Powerhead Demo Clears Key Hurdles 1

Lt Col Erno Named a Top Air Force Scientist 2

Turbine Engine Simulations Highlighted by ASC 3

Software Tool Assists Satellite Design 4

PR Captures Three AFRL Financial Management Awards 4

Scramjet Fuels Evaluation Test Completed 5

Improved Solid Rocket Motor Insulation Transitioned to Industry 6

ATEGG Lead Engineer Recognized for Service 6

Inaugural VAATE Emissions Workshop Held 7

JTAGG Group Leader Honored 7

PR Tech Transfer Partner Cited in National Trade Publication 8

Progress on Air Plasma Book 8

INTEGRATED POWERHEAD DEMO CLEARS KEY HURDLES: The Propulsion Directorate recently achieved two key milestones in testing for the Integrated Powerhead Demonstration (IPD) Program. The first milestone was the completion of liquid hydrogen turbopump testing. This test series validated the mechanical design elements of the liquid hydrogen pump and provided data necessary for modeling engine system operation. All test criteria in the test matrix were achieved. In addition, the IPD team successfully completed high power level testing of the IPD liquid oxygen preburner. This test program validated the design elements of the liquid oxygen preburner, which provides a more benign temperature environment to the turbine of the liquid oxygen turbopump. Chamber pressure and the exhaust temperature profiles met pretest predictions. The IPD Program is the Integrated High Payoff Rocket Propulsion Technology (IHPRPT) Program Phase 1 Cryoboost Engine Demonstrator and is a critical IHPRPT technology demonstrator. The IPD Program has two main technical goals: (1) to increase turbine life by using a full flow cycle staged combustion design, and (2) to increase bearing lifetime and reduce wear by incorporating hydrostatic bearing technology in both the hydrogen and oxygen turbopumps. (Mr. J. Thornburg, AFRL/PRSE, (661) 275-5320)

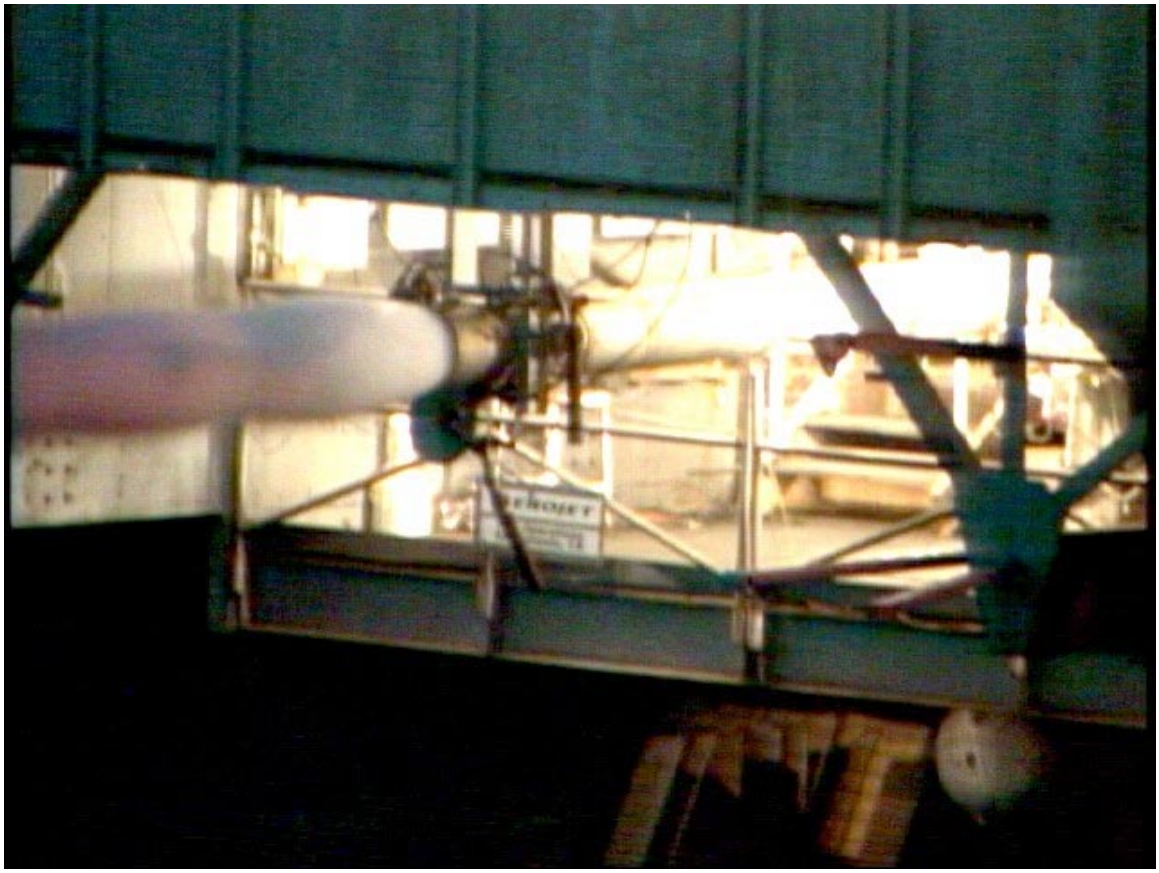

IPD Oxygen Preburner Testing at Aerojet's Sacramento Test Facility

IPD Hydrogen Pump Testing at NASA Stennis Space Center E-1 Complex in Mississippi

LT COL ERNO NAMED A TOP AIR FORCE SCIENTIST: Lt Col JoAnn L. Erno, Chief of the Propulsion Directorate's Power Division, was recently named the winner of the Air Force Scientist of the Year Award (Senior Military Category). Lt Col Erno was recognized for her leadership in directing a team of 110 researchers and scientists toward exceptional advancements in power and thermal technologies. She championed a new high temperature superconducting generator program as the only solution to enable directed energy weapons. She also pioneered the first-ever integrated propulsion and power effort and orchestrated insertion of new power electronics and lithium ion batteries into commercial and military applications. Because of the efforts to develop these advanced technologies, military avionics are now supportable with new capacitors, flight applications of directed energy weapons are possible, and the B-2 is upgradeable to a new high-power communications systems. (Col M. Heil, AFRL/PR, (937) 255-2520)

Lt Col JoAnn L. Erno was recently named the winner of the Air Force Scientist of the Year Award (Senior Military Category)

TURBINE ENGINE SIMULATIONS HIGHLIGHTED BY ASC: The Propulsion Directorate, General Electric Aircraft Engines (GEAE), and ASC's Major Shared Resource Center (MSRC) successfully demonstrated the use of the TURBO Computational Fluid Dynamics (CFD) code to analyze an advanced compression system in a time frame short enough to impact the design process. These simulations are part of the High Impact Technology (HIT) studies supporting the Versatile Affordable Advanced Turbine Engines (VAATE) Program. This Modeling and Simulation (M&S) effort benefits both industry and the Air Force, and the results are being used to design and analyze advanced turbomachinery components. The simulations were run on the newly acquired ASC MSRC 2048 processor SGI Origin 3900 supercomputer. PR personnel participated in the Ribbon Cutting Ceremony for the new computer, which was a high level ceremony attended by dignitaries such as Ohio Congressman Dave Hobson* and Lieutenant General Richard Reynolds, ASC Commander. A briefing by the ASC MSRC director used the M&S performed by PR as one of two examples highlighting how simulations run on the new computer are supporting the warfighter. (Dr. S. Gorrell, AFRL/PRTF, (937) 255-7344)

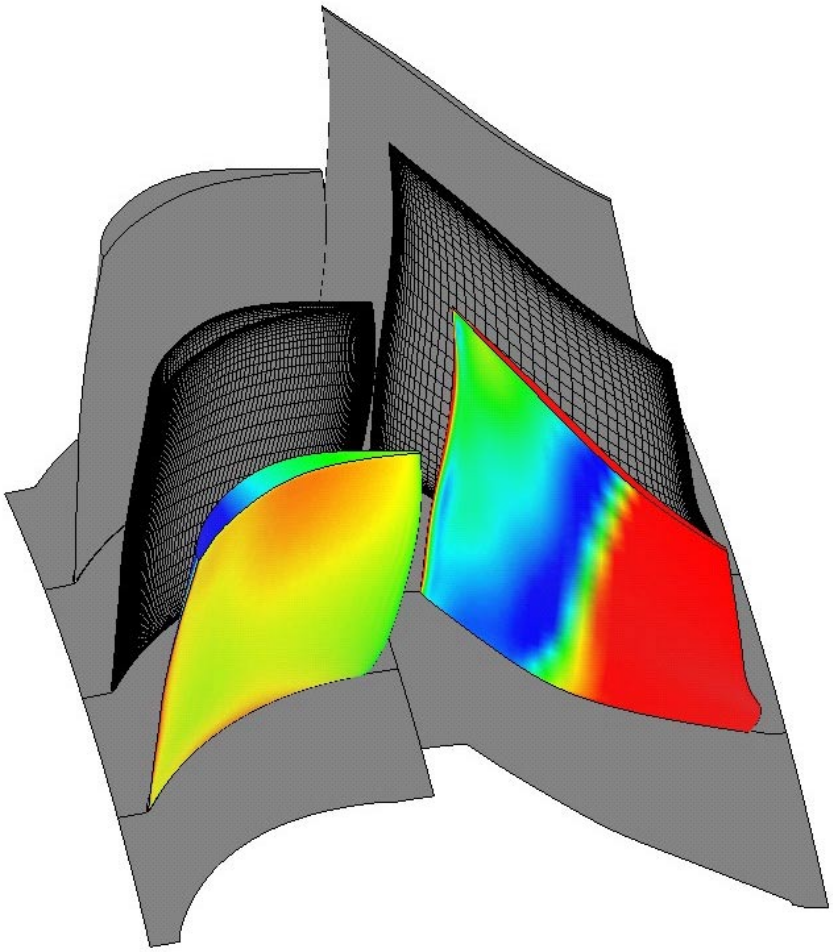

A sample of the results obtained using the TURBO CFD code

* US Congressman, Ohio's 7th District.

SOFTWARE TOOL ASSISTS SATELLITE DESIGN: A Propulsion Directorate modeling and simulation (M&S) team has collaborated with experts in academia, industry, and government to develop a comprehensive software toolkit for modeling the interaction of the plumes of electric propulsion (EP) thrusters with spacecraft surfaces. This software tool is useful for assessing the risk involved in placing EP thrusters in various configurations relative to spacecraft, and for examining potential materials for spacecraft surfaces to minimize this risk. The judicious use of this predictive tool can aid designers in extending satellite lifetime. This tool also permits analysis of complex spacecraft/propulsion configurations in order to reduce the risk of integrating EP thrusters onto satellites without resorting to detailed and expensive experimental efforts for each satellite. This tool has already been used in direct support of Space and Missile Center's MILSATCOM AEHF[†] satellite program. In addition, the M&S team has also been supporting the US Air Force Academy by providing analysis of contamination on the FalconSat3 satellite and NASA by providing analysis for the Space Technology 7 (ST7) mission. This work, under the title of "Thruster-Spacecraft Interaction Modeling and Simulation," was named the PR In-House Project of the Quarter. The winning team consists of PR's Drs. Douglas VanGilder and Michael Fife, Dr. Matthew Gibbons of ERC Inc., and Dr. David Marshall and Mr. Mark Santi of Advatech Pacific. (Dr. D. VanGilder, AFRL/PRSS, (661) 275-5908)

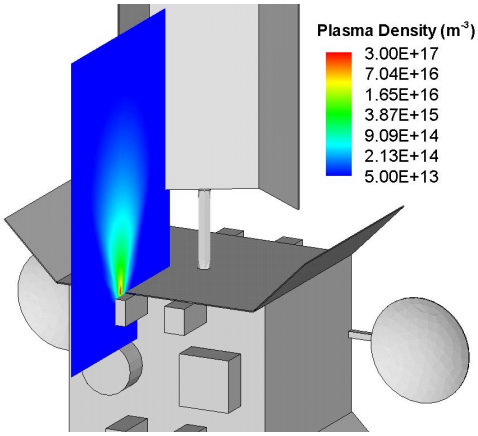

Slice showing plasma density from a 200W HET firing onboard a geosynchronous satellite

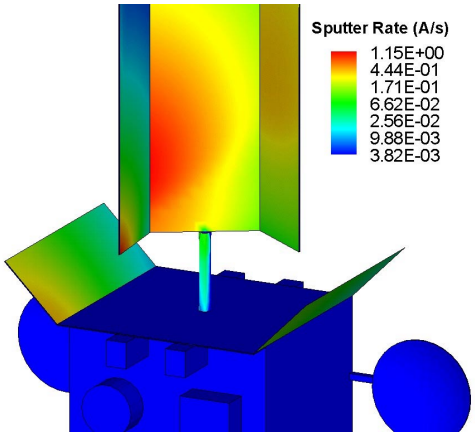

Surface sputtering rate

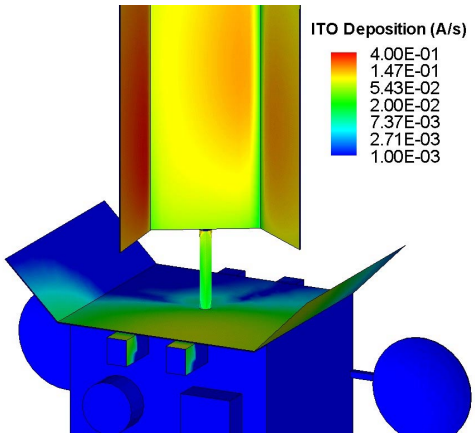

Redeposition of ITO from the solar array cover glass to other spacecraft surfaces due to sputtering

PR CAPTURES THREE AFRL FINANCIAL MANAGEMENT AWARDS: Propulsion Directorate personnel recently captured three AFRL Financial Management (AFRL/FM) Awards. Ms. Lori Williams, a financial analyst at Edwards AFB, California, was named the AFRL Financial Analysis Officer of the Year (GS-11 and above). Mr. Eric Talley,[‡] a contracted program manager at Wright-Patterson AFB, Ohio, received the AFRL

[†] MILSATCOM = Military Satellite Communications; AEHF = Advanced Extremely High Frequency
[‡] Mr. Talley is an on-site contractor with Universal Technology Corp.

Professional Support Award. Finally, the AFRL/PRF-West Financial Team was presented with the AFRL Financial Special Service Award. The members of this winning team are AFRL/PRF's Lt Steve Bolster, Ms. Lori Williams, Lt Lisa Welmers, Ms. Cynthia Nicolas, Ms. Frances Fagan, Ms. Jennifer Wood, Mr. Joseph Montes, Ms. Linda Fix, and Lt Chris Underwood of AFRL/PRF; and contractors Ms. Sena Robinson, Ms. Brandy Vaughn, Mr. Bill Werner and Ms. Joy Garcia. (Mr. P. Mitchell, AFRL/PRF, (937) 255-3044)

Ms. Lori Williams was named the AFRL Financial Analysis Officer of the Year (GS-11 and above)

Mr. Eric Talley received the AFRL Professional Support Award

SCRAMJET FUELS EVALUATION TEST COMPLETED: The Propulsion Directorate recently completed a series of tests of candidate fuels for use in scramjet engines. This research, which was conducted at United Technologies Research Center in East Hartford, Connecticut, examined the endothermic (regenerative) cooling capability of the fuels, as well as evaluating ignition and operability characteristics, at simulated Mach 5 flight conditions. Numerous fuels were tested including: JP-7 (the baseline scramjet fuel), JP-8 (standard Air Force aviation fuel), JP-10 (a high density fuel developed for cruise missile systems), and n-octane. Data analysis is ongoing, but a surprising preliminary result has been the high performance of JP-8. This suggests an approach to reduce the cost of fuels for scramjet propulsion systems since JP-8 is widely available and relatively inexpensive. Hydrocarbon-fueled scramjets, which operate nominally in the Mach 4 to 8 regime, have near-term application to high speed missiles and are an enabling technology for access-to-space and global reach missions. (Dr. T. Jackson, AFRL/PRA, (937) 255-7057)

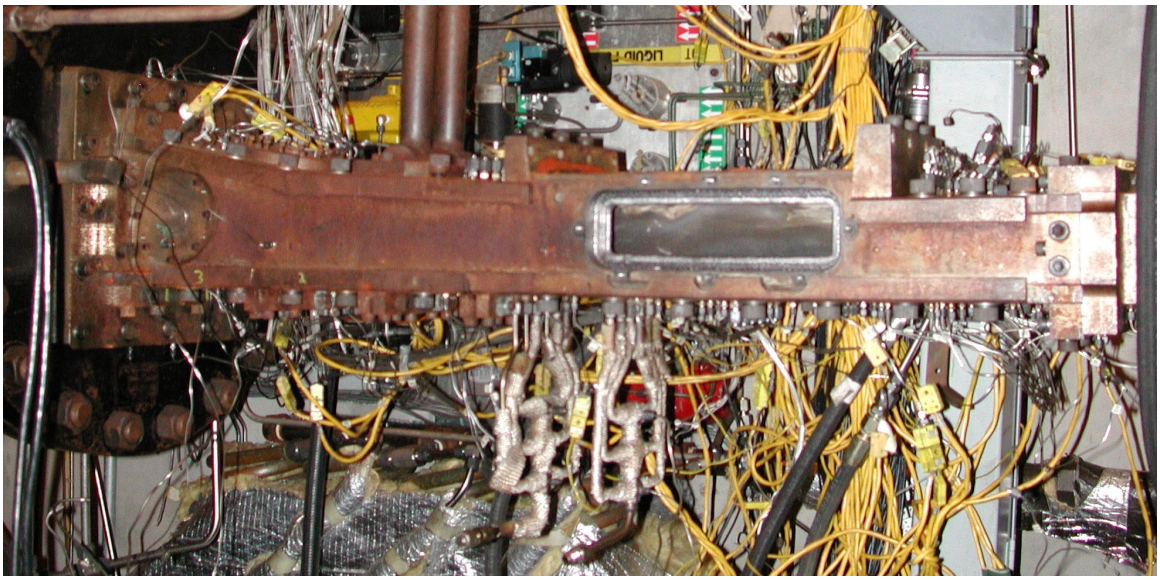

Scramjet fuels tests were completed at UTRC using this test rig

IMPROVED SOLID ROCKET MOTOR INSULATION TRANSITIONED TO INDUSTRY: The Propulsion Directorate has pioneered work on a new family of polymers known as POSS or Polyhedral Oligomeric Silsesquioxanes. Recently 100 pounds of a new POSS material ($Vinyl_8T_8$) was delivered to Pratt and Whitney's solid rocket motor division, Chemical Systems Division, for processing into solid rocket motor insulation for the Integrated High Performance Rocket Propulsion Technology (IHPRPT) Phase II demonstrator motor. This new insulation has the potential of decreasing the insulation weight in a solid rocket motor by 22%, which would allow a 3% increase in missile payload or a 3% decrease in missile weight and cost. This is the largest delivery of this POSS material to date, and it represents a significant milestone in the technology transition and scale-up of a member of the POSS family of materials. Demonstration scale firings are necessary to validate laboratory subscale tests and modeling before a SPO will consider taking advantage of laboratory scale technology breakthroughs. (Dr. R. Blanski, AFRL/PRSM, (661) 275-5391)

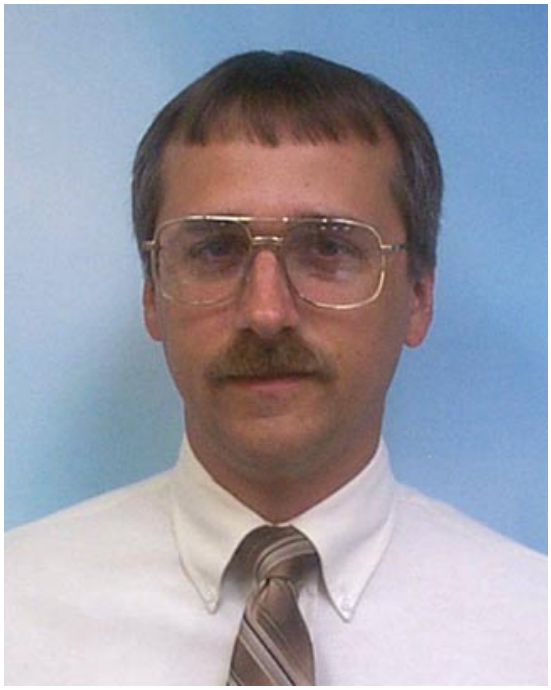

Mr. David Jay was selected to receive the Exemplary Civilian Service Award

ATEGG LEAD ENGINEER RECOGNIZED FOR SERVICE: The Propulsion Directorate's Mr. David A. Jay was recently selected to receive the Exemplary Civilian Service Award. Mr. Jay was recognized for his distinguished service from January 2002 to August 2003, during which time he served in many key roles. As the lead project engineer responsible for the $62 million Advanced Turbine Engine Gas Generator (ATEGG) Program, Mr. Jay oversaw the delivery, installation, and test

of the highest performing turbofan/turbojet core engine in the world. He was also the technical leader of the F135 Advanced Technology Demonstrator (ATD) Program, which provides technology for the F135 engine for the F-35 aircraft. Technology being transitioned under this effort will reduce engine weight by 244 pounds, decrease engine production cost by $315K each, save $6 billion in engine Life Cycle Cost, and enable meeting engine performance requirements. In addition, Mr. Jay served as the Joint Technology Demonstrator Engine (JTDE) Group Leader. (Mr. R. McNally, AFRL/PRTP, (937) 255-7531)

INAUGURAL VAATE EMISSIONS WORKSHOP HELD: Propulsion Directorate engineers and scientists recently conducted the first Air Force Versatile Affordable Advanced Turbine Engines (VAATE) Emissions Workshop. The purpose of the workshop was: 1) to share information among people working on in-house and contracted emissions related projects, 2) to further coordinate the technologies that are being developed within PR, and 3) to discuss what direction emissions studies within PR need to go. VAATE has an objective to reduce combustor emissions trends by 60% over FY2000 projected levels at intermediate rated power (IRP) (using the proposed emission reduction parameter, ERP) by FY2017. The workshop helped solidify four major areas of on-going research: advanced combustion concepts, kinetics/emissions modeling, fuel additives, and advanced diagnostics. The group worked to identify AFRL's current strengths, such as test facilities and diagnostic capabilities, and the areas needing improvement, such as coordination between AFRL and the National Institute of Standards and Testing (NIST) for kinetic modeling. Areas for further collaboration, internal as well as external, were uncovered, especially among material and aerothermal combustion research, which could drastically reduce cost, development time, and risk. (Ms. J. Kleinfeldt, AFRL/PRTC, (937) 255-1673)

JTAGG GROUP LEADER HONORED: The Propulsion Directorate's Mr. Martin F. Huffman was recently selected to receive the Exemplary Civilian Service Award. Mr. Huffman was recognized for his distinguished service from January 2002 to August 2003, during which time he served as the Group Leader for $113 million Joint Turbine Advanced Gas Generator (JTAGG) Program. JTAGG is a tri-service Army, Air Force, and Navy program which has the responsibility of demonstrating the DoD Integrated High Performance Turbine Engine Technology (IHPTET) Program turboprop/turboshaft aircraft engine goals. This class of engines applies to helicopters, small transport aircraft, and unmanned air vehicles. During this period, Mr. Huffman oversaw the test of one core demonstrator engine and two component rig tests in preparation for additional core demonstrator engine testing. Mr. Huffman is also the Turbine Engine Division (AFRL/PRT) Lead for the United Kingdom Information Exchange Agreement, the division and branch

Information Assurance Focal Point, the branch Computer Focal Point, and the branch ASTARS[§] lead. (Mr. R. McNally, AFRL/PRTP, (937) 255-7531)

PR TECH TRANSFER PARTNER CITED IN NATIONAL TRADE PUBLICATION: The November 2003 issue of *Chemical Engineering Progress*, the monthly journal of The American Institute of Chemical Engineers (AIChE), is a special supplement focused on nanotechnology. A feature article[**] was included in this issue that defined key areas for nanotechnology research. One of these key areas is composite materials; a strong research area for the Propulsion Directorate. A PR technology transfer partner in the area of POSS (polyhedral oligomeric silsesquioxanes) nanotechnology, Hybrid Plastics, is highlighted in the article and the Air Force is acknowledged as one of their collaborators. The POSS polymer research at PR and Hybrid Plastics has already shown great potential as insulation and structural material for rocket propulsion applications. (Dr. D. Marchant,[††] AFRL/PRSM, (661) 275-6318)

Want more information?

- The November 2003 issue of *Chemical Engineering Progress* is available at the following website: http://www.cepmagazine.org.
- More information on Hybrid Plastics is available at their website: http://www.hybridplastics.com.

Mr. Marty Huffman was selected to receive the Exemplary Civilian Service Award

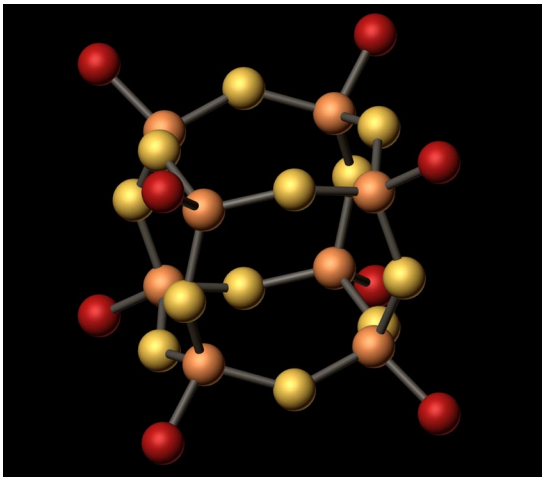

A representative POSS molecule

PROGRESS ON AIR PLASMA BOOK: A meeting of editors and most of the chapter masters of the multiple-authored *Air Plasma Book* was held in San Francisco on 23 October 2003 to assess the progress made in both review and revision of all the chapters. Four AFRL scientists attended

[§] ASTARS = A Science and Technology Action Report System

[**] Tim Harper, Cristina Román Vas, and Paul Holister, "Fueling the Chemical Industry's Future," *Chemical Engineering Progress*, Vol. 98. No. 11, pp. 34S-38S.

[††] Dr. Marchant is an on-site contractor with ERC, Inc.

this meeting, including Dr. Robert Barker of AFOSR as one editor, Dr. Alan Garscadden (AFRL/PR) as an advisor, Dr. Bishwa Ganguly (AFRL/PRPE) as one chapter master, and Dr. Williams (AFRL/VS) as a chapter co-author. This meeting was held in conjunction with the 56th Gaseous Electronics Conference to specially permit authors and chapter masters from outside the US to attend the meeting. The motive for publishing a new air plasma reference was driven by the challenges and opportunities presented in this rapidly growing research area. This book will present detailed advances in atmospheric-pressure plasma source development, air plasma diagnostics and characterization, air plasma chemistry at atmospheric pressure, modeling and computational techniques as applied to atmospheric-pressure air and/or other gas mixture plasmas, and an assessment of the status and prospects of atmospheric-pressure air and/or gas mixture plasma applications. This book will also cover results of work that have been at the forefront of research and development in the US and elsewhere over the last few years. The utility of this proposed book, to be published by the Institute of Physics, will be to acquaint a new researcher with the basic principles and the state-of-the-art technological applications of atmospheric-pressure air plasmas. Most of the recent research work performed in the US in this field was sponsored by AFOSR/NE programs managed by Dr. Barker. (Dr. B. Ganguly, AFRL/PRPE, (937) 255-2923)